Network Video Recorder

Quick Start Guide

TABLE OF CONTENTS

Chapter1 Panels Description 7
1.1 Front Panel 7
1.1.1 DS-96000NI-I16(/H) Series 7
1.1.2 DS-90000NI-I24(/H) Series 8
1.2 Rear Panel 9
Chapter 2 Installation and Connections 11
2.1 Installation 11
2.2 Hard Disk Installation 11
2.2.1 DS-96000NI-I16(/H) Series 11
2.2.2 DS-96000NI-I24(/H) Series 13
2.3 Connections 15
2.3.1 Alarm Input Wiring 15
2.3.2 Alarm Output Wiring 16
2.3.3 Use Alarm Connectors 16
2.3.4 Controller Connection 17
2.4 HDD Storage Calculation Chart 18
Chapter 3 Menu Operation 19
3.1 Start up Your Device 19
3.2 Activate Your Device 19
3.3 Configure Unlock Pattern for Login 20
3.4 Log in to the System 21
3.5 Enter Wizard to Configure Fast Basic Settings 22
3.6 Network Settings 23
3.7 Add IP Cameras 23
3.8 Start Live View 24
3.9 One-Touch RAID Configuration 24
3.10 Recording Settings 25
3.11 Playback 26
Chapter 4 Access by Web Browser 28

Quick Start Guide

About this Manual

This Manual is applicable to Network Video Recorder (NVR).

The Manual includes instructions for using and managing the product. Pictures, charts, images and all other information hereinafter are for description and explanation only. The information contained in the Manual is subject to change, without notice, due to firmware updates or other reasons. Please find the latest version in the company website.

Please use this user manual under the guidance of professionals.

Legal Disclaimer

TO THE MAXIMUM EXTENT PERMITTED BY APPLICABLE LAW, THE PRODUCT DESCRIBED, WITH ITS HARDWARE, SOFTWARE AND FIRMWARE, IS PROVIDED “AS IS”, WITH ALL FAULTS AND ERRORS, AND OUR COMPANY MAKES NO WARRANTIES, EXPRESS OR IMPLIED, INCLUDING WITHOUT LIMITATION, MERCHANTABILITY, SATISFACTORY QUALITY, FITNESS FOR A PARTICULAR PURPOSE, AND NON-INFRINGEMENT OF THIRD PARTY. IN NO EVENT WILL OUR COMPANY, ITS DIRECTORS, OFFICERS, EMPLOYEES, OR AGENTS BE LIABLE TO YOU FOR ANY SPECIAL, CONSEQUENTIAL, INCIDENTAL, OR INDIRECT DAMAGES, INCLUDING, AMONG OTHERS, DAMAGES FOR LOSS OF BUSINESS PROFITS, BUSINESS INTERRUPTION, OR LOSS OF DATA OR DOCUMENTATION, IN CONNECTION WITH THE USE OF THIS PRODUCT, EVEN IF OUR COMPANY HAS BEEN ADVISED OF THE POSSIBILITY OF SUCH DAMAGES.

REGARDING TO THE PRODUCT WITH INTERNET ACCESS, THE USE OF PRODUCT SHALL BE WHOLLY AT YOUR OWN RISKS. OUR COMPANY SHALL NOT TAKE ANY RESPONSIBILITES FOR ABNORMAL OPERATION, PRIVACY LEAKAGE OR OTHER DAMAGES RESULTING FROM CYBER ATTACK, HACKER ATTACK, VIRUS INSPECTION, OR OTHER INTERNET SECURITY RISKS; HOWEVER, OUR COMPANY WILL PROVIDE TIMELY TECHNICAL SUPPORT IF REQUIRED.

SURVEILLANCE LAWS VARY BY JURISDICTION. PLEASE CHECK ALL RELEVANT LAWS IN YOUR JURISDICTION BEFORE USING THIS PRODUCT IN ORDER TO ENSURE THAT YOUR USE CONFORMS THE APPLICABLE LAW. OUR COMPANY SHALL NOT BE LIABLE IN THE EVENT THAT THIS PRODUCT IS USED WITH ILLEGITIMATE PURPOSES.

IN THE EVENT OF ANY CONFLICTS BETWEEN THIS MANUAL AND THE APPLICABLE LAW, THE LATER PREVAILS.

Regulatory Information

FCC Information

Please take attention that changes or modification not expressly approved by the party responsible for compliance could void the user's authority to operate the equipment.

FCC compliance: This equipment has been tested and found to comply with the limits for a Class A digital device, pursuant to part 15 of the FCC Rules. These limits are designed to provide reasonable protection against harmful interference when the equipment is operated in a commercial environment. This equipment generates, uses, and can radiate radio frequency energy and, if not installed and used in accordance with the instruction manual, may cause harmful interference to radio communications. Operation of this equipment in a residential area is likely to cause harmful interference in which case the user will be required to correct the interference at his own expense.

FCC Conditions

This device complies with part 15 of the FCC Rules. Operation is subject to the following two conditions:

1. This device may not cause harmful interference.
2. This device must accept any interference received, including interference that may cause undesired operation.

EU Conformity Statement

This product and - if applicable - the supplied accessories too are marked with "CE" and comply therefore with the applicable harmonized European standards listed under the EMC Directive 2014/30/EU, the LVD Directive 2014/35/EU, the RoHS Directive 2011/65/EU.

2012/19/EU (WEEE directive): Products marked with this symbol cannot be disposed of as unsorted municipal waste in the European Union. For proper recycling, return this product to your local supplier upon the purchase of equivalent new equipment, or dispose of it at designated collection points. For more information see: www.recyclethis.info

2006/66/EC (battery directive): This product contains a battery that cannot be disposed of as unsorted municipal waste in the European Union. See the product documentation for specific battery information. The battery is marked with this symbol, which may include lettering to indicate cadmium (Cd), lead (Pb), or mercury (Hg). For proper recycling, return the battery to your supplier or to a designated collection point. For more information see: www.recyclethis.info

Industry Canada ICES-003 Compliance

This device meets the CAN ICES-3 (A)/NMB-3(A) standards requirements.

Applicable Models

This manual is applicable to the models listed in the following table.

Series	Model
DS-96000NI-I16	DS-96128NI-I16
	DS-96256NI-I16
DS-96000NI-I16/H	DS-96128NI-I16/H
	DS-96256NI-I16/H
DS-96000NI-I24	DS-96128NI-I24
	DS-96256NI-I24
DS-96000NI-I24/H	DS-96128NI-I24/H
	DS-96256NI-I24/H

Symbol Conventions

The symbols that may be found in this document are defined as follows.

Symbol	Description
NOTE	Provides additional information to emphasize or supplement important points of the main text.
WARNING	Indicates a potentially hazardous situation, which if not avoided, could result in equipment damage, data loss, performance degradation, or unexpected results.
DANGER	Indicates a hazard with a high level of risk, which if not avoided, will result in death or serious injury.

Safety Instructions

- Proper configuration of all passwords and other security settings is the responsibility of the installer and/or end-user.
- In the use of the product, you must be in strict compliance with the electrical safety regulations of the nation and region. Please refer to technical specifications for detailed information.
- Input voltage should meet both the SELV (Safety Extra Low Voltage) and the Limited Power Source with 100~240 VAC or 12 VDC according to the IEC60950-1 standard. Please refer to technical specifications for detailed information.
- Do not connect several devices to one power adapter as adapter overload may cause over-heating or a fire hazard.
- Please make sure that the plug is firmly connected to the power socket.
- If smoke, odor or noise rise from the device, turn off the power at once and unplug the power cable, and then please contact the service center.

Preventive and Cautionary Tips

Before connecting and operating your device, please be advised of the following tips:

- Ensure unit is installed in a well-ventilated, dust-free environment.
- Unit is designed for indoor use only.
- Keep all liquids away from the device.
- Ensure environmental conditions meet factory specifications.
- Ensure unit is properly secured to a rack or shelf. Major shocks or jolts to the unit as a result of dropping it may cause damage to the sensitive electronics within the unit.
- Use the device in conjunction with an UPS if possible.
- Power down the unit before connecting and disconnecting accessories and peripherals.
- A factory recommended HDD should be used for this device.
- Improper use or replacement of the battery may result in hazard of explosion. Replace with the same or equivalent type only. Dispose of used batteries according to the instructions provided by the battery manufacturer.

- When installing the device into a cabinet over 2U height, it is suggested to use rack shelf to bear the weight. If the cabinet height is over 4U, it is suggested to use slide rails or rack shelf to bear the weight.

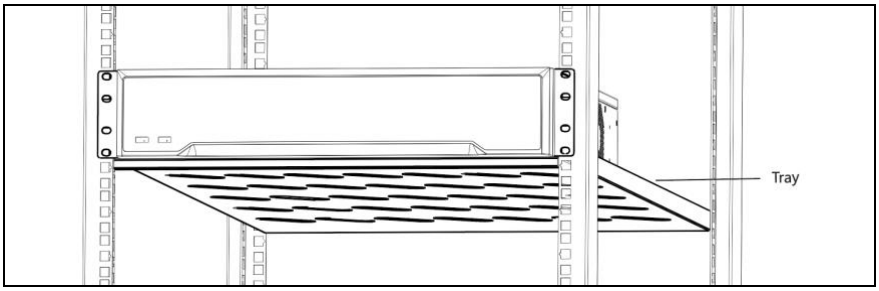

Chapter1 Panels Description

1.1 Front Panel

1.1.1 DS-96000NI-I16(/H) Series

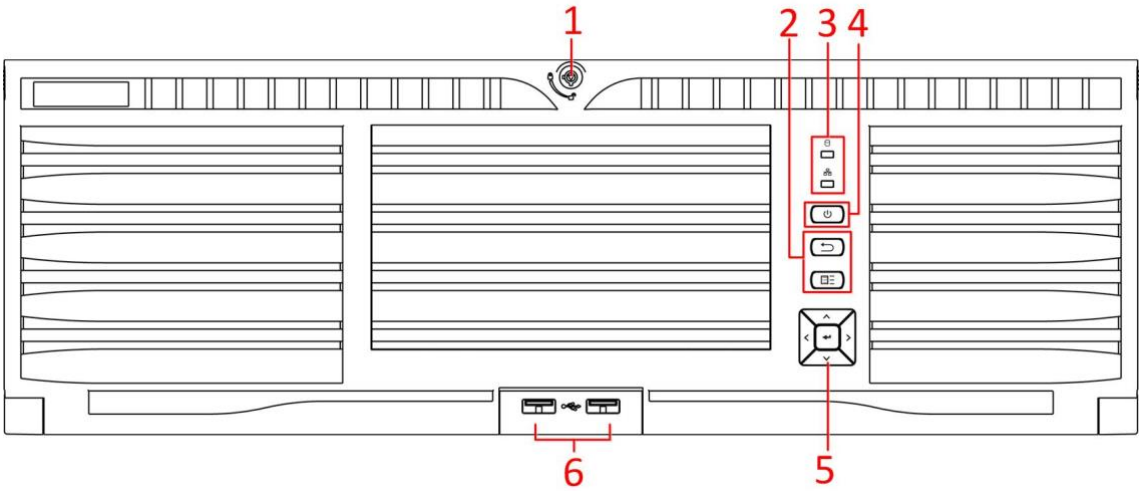

Figure 1-1 DS-96000NI-I16(/H) Series

Table 1-1 Description

No.	Name		Description
1	Panel lock		Locks or unlocks the panel by the key.
2	Shortcut buttons	Exit	↙ Returns to the previous menu. ↙ Press it twice quickly to switch the main and auxiliary port. ↙ In live view mode, press it to enter PTZ control interface.
		Menu	↙ Press it to pop up main menu. ↙ Hold it for 5 seconds to turn on/off button sound. ↙ During playback, press it to show/hide control panel.
3	Status indicator	HDD	↙ Solid red: at least one HDD is installed ↙ Unlit: no HDD is detected. ↙ Flashing red: HDD is reading/writing.
		Tx/Rx	Flashing blue indicates network communication is normal.

4	Power switch		Powers on/off device. Solid blue indicates device is powered on. Solid red indicates device is shut down.
5	Control buttons	ENTER	↙ Confirms selection in any of the menu modes. ↙ Checks the checkbox fields. ↙ Switches on/off status. ↙ Plays or pauses the video playing in playback mode. ↙ Advances the video by a single frame in single-frame playback mode. ↙ Stops/starts auto switch in auto-switch mode.
		DIRECTION	↙ Navigates between different fields and items in menus. ↙ In the playback mode, use the Up and Down buttons to speed up and slow down recorded video. Use the Left and Right buttons to select the next and previous video files. ↙ Cycles through channels in live view mode. ↙ Controls the movement of the PTZ camera in PTZ control mode.
6	USB interfaces		Universal Serial Bus (USB) ports for additional devices such as USB mouse and USB Hard Disk Drive (HDD).

1.1.2 DS-90000NI-I24(/H) Series

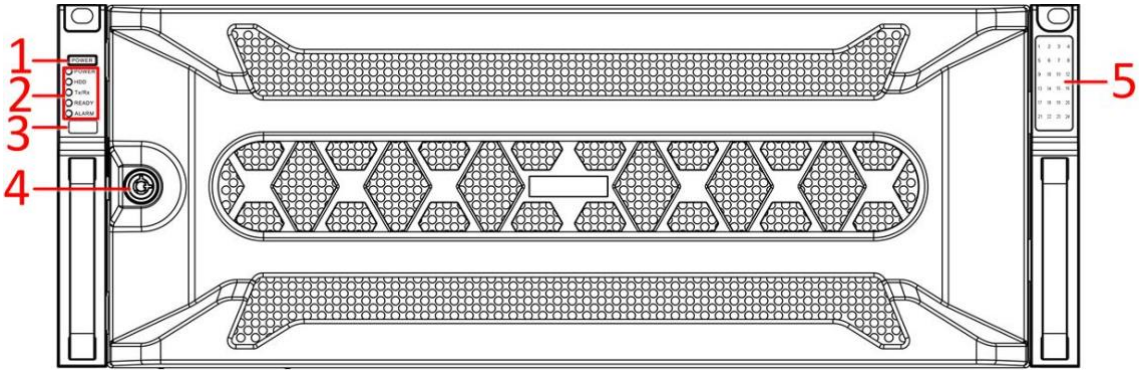

Figure 1-2 DS-96000NI-I24(/H) Series

Table 1-2 Panel Description

No.	Name		Description
1	Power switch		Powers on/off device.
2	Status indicator	Power	Solid blue indicates device is powered on. Solid red indicates device is shut down.

		HDD	↙ Solid red: at least one HDD is installed ↙ Unlit: no HDD is detected. ↙ Flashing red: HDD is reading/writing.
		Tx/Rx	Flashing blue indicates network communication is normal.
		Ready	Solid blue indicates device runs properly.
		Alarm	Solid red indicates alarm occurs.
3	USB interface		Universal Serial Bus (USB) ports for additional devices such as USB mouse and USB Hard Disk Drive (HDD).
4	Panel lock		Locks or unlocks the panel by the key.
5	HDD sequence indicator		Shows the HDD installation slot.

1.2 Rear Panel

Purpose:

The interfaces of DS-96000NI-I16 and DS-96000NI-I24 are the same. The interfaces of DS-96000NI-I16/H and DS-96000NI-I24/H are the same. We take the example of DS-96000NI-I16/H series to introduce the rear panel.

NOTE

The difference between DS-96000NI-I16 and DS-96000NI-I16/H is DS-96000NI-I16/H contains the decoding board, that is the module marked as 13 in following figure.

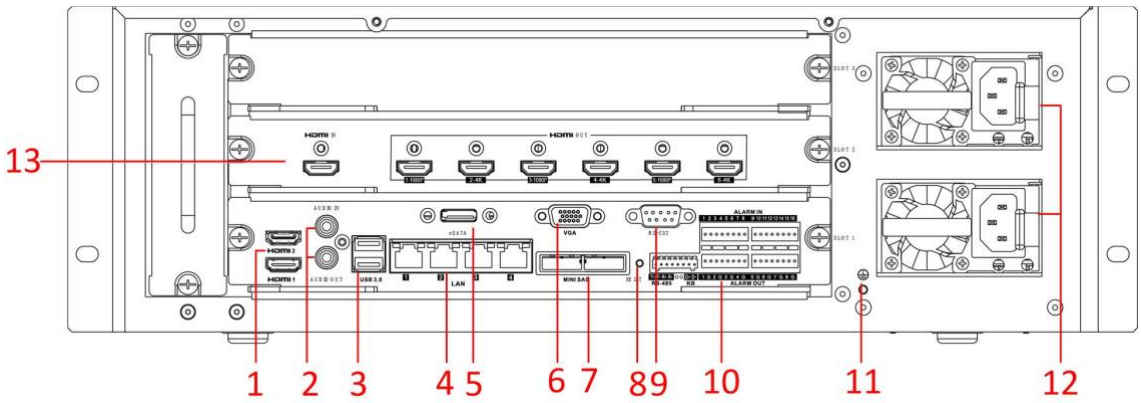

Figure 1-3 DS-96000NI-I16/H Series

Table 1-3 Panel Description

No.	Name	Description
1	HDMI 1/2	HDMI video output connector.
2	Audio in	RCA connector for audio input.
	Audio out	RCA connector for audio output.
3	USB 3.0	Universal Serial Bus (USB 3.0) ports for additional devices such as USB mouse and USB Hard Disk Drive (HDD).
4	LAN	4 10/100/1000 Mbps self-adaptive Ethernet interfaces.
5	eSATA	Connects external SATA HDD, CD/DVD-RM.
6	VGA	DB9 connector for VGA output.
7	Mini SAS (optional)	Connector for mini SAS.
8	Reset	Reset button.
9	RS-232	Connector for RS-232 devices.
10	Alarm in	Connector for alarm input.
	Alarm out	Connector for alarm output.
	RS-485	Connector for RS-485 devices.
	KB	Connector for keyboard.
11	GND	Ground (needs to be connected when NVR starts up).
12	Power supply modules	Only one power supply module is provided by default. Two power supply modules are optional for redundancy.
13	Decoding board	Decoding board. Only available for DS-96000NI-I16/H and DS-96000NI-I24/H.

Chapter 2 Installation and Connections

2.1 Installation

During installation of the NVR:

- Use brackets for rack mounting.
- Ensure ample room for audio and video cables.
- When routing cables, ensure that the bend radius of the cables is no less than five times of its diameter.
- Connect the alarm cable.
- Allow at least 2cm (≈0.75-inch) of space between racks mounted devices.
- Ensure the NVR is grounded.
- Environmental temperature should be within the range of -10° C to +55° C (+14° F to +131° F).
- Environmental humidity should be within the range of 10% to 90%.

2.2 Hard Disk Installation

Before you start:

Disconnect the power from the NVR before installing a hard disk drive (HDD). A factory recommended HDD should be used for this installation.

Tools Required: Screwdriver.

2.2.1 DS-96000NI-I16(/H) Series

Purpose:

The following section introduces the HDD installation for the DS-96000NI-I16(/H) series NVR.

Step 1 Fasten the hard disk mounting ears to the hard disk with screws.

Figure 2-1 Fasten Hard Disk

Step 2 Insert the key and turn in clockwise direction to open the panel lock.

Figure 2-2 Insert Panel Key

Step 3 Press the buttons on both sides of the panel and open the front panel.

Figure 2-3 Open Panel Lock

Step 4 Insert the hard disk along the slot until it is placed into position.

Figure 2-4 Insert Hard Disk

Step 5 Repeat the above steps to install other hard disks onto the NVR. After having finished the installation of all hard disks, close the front panel and lock it with the key again.

Figure 2-5 Lock Panel

2.2.2 DS-96000NI-I24(/H) Series

Purpose:

The following section introduces the HDD installation for the DS-96000NI-I24(/H) series NVR.

Step 1 Unlock the front panel with the panel key.

Figure 2-6 Unlock the Panel

Step 2 To remove the cover from front panel, operate following steps:

1) Slightly pull the cover out of the device along the direction arrow ① and make it a little above the left handle. The angle between the cover and the front panel must be within 10°.
2) Pull the front panel out of the device along the direction arrow ②.

NOTE

Handle with care to avoid damage.

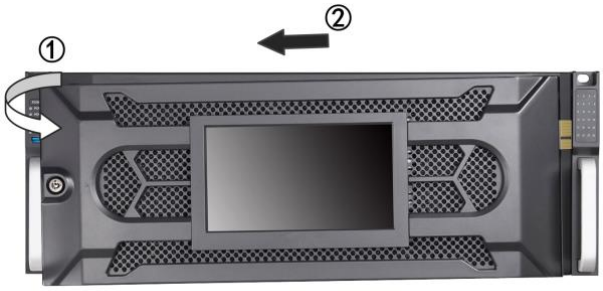

Figure 2-7 Remove the Cover

Step 3 Press the blue button to pop up the handle and hold the handle and pull the hard disk box out of the slot.

Figure 2-8 Pull out Slot

Step 4 Fix the hard disk in the hard disk box.

1) Place a hard disk in the hard disk box. The SATA interface must face the hard disk box bottom.
2) Adjust the hard disk position. Ensure the hard disk rear aligns with hard disk bottom.
3) Use a screwdriver to fasten the four screws into the screw holes in both sides.

Figure 2-9 Fix the Hard Disk

Step 5 Push the hard disk box back into the slot.

Figure 2-10 Push the Hard Disk Box into the Slot

Step 6 Press the handle until you hear a click. Thus to fix the hard disk box. Repeat above steps to install the rest hard disk boxes.

Figure 2-11 Press the Handle

Step 7 Install the cover back to front panel. And lock it with panel key.

Figure 2-12 Reinstall the Cover and Lock the Panel

2.3 Connections

2.3.1 Alarm Input Wiring

The alarm input is an open/closed relay. To connect the alarm input to the device, use the following diagram.

NOTE

If the alarm input is not an open/close relay, please connect an external relay between the alarm input and the device.

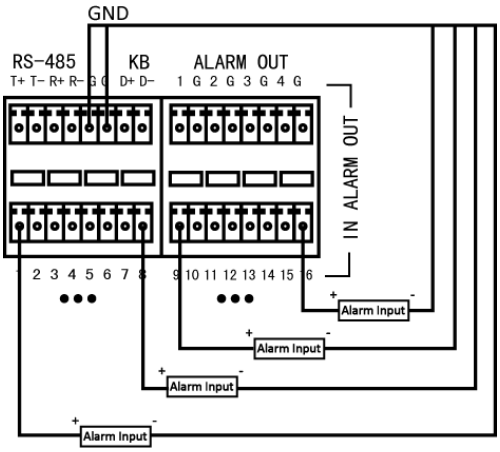

Figure 2-13 Alarm Input Wiring

2.3.2 Alarm Output Wiring

To connect to an alarm output (AC or DC load), use the following diagram:

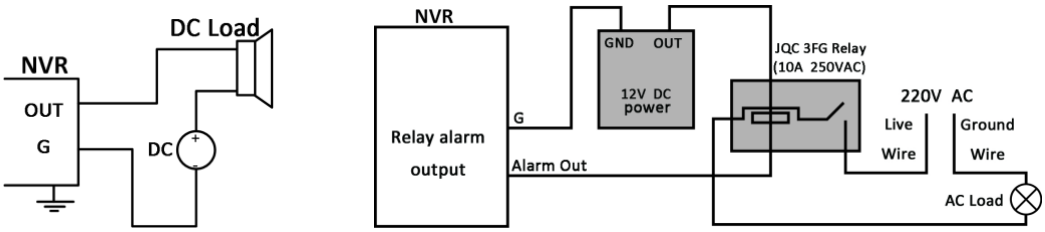

Figure 2-14 Alarm Output Wiring

For DC load, the jumpers can be used within the limit of 12V/1A safely.

To connect an AC load, jumpers should be left open (you must remove the jumper on the motherboard in the NVR). Use an external relay for safety (as shown in the figure above).

There are 4 jumpers (JP6, JP9, JP10, and JP11) on the motherboard, each corresponding with one alarm output. By default, jumpers are connected. To connect an AC load, jumpers should be removed.

Example:

If you connect an AC load to the alarm output 3 of the NVR, then you must remove the JP 3 jumper.

2.3.3 Use Alarm Connectors

To connect alarm devices to the NVR:

Step 1 Disconnect *pluggable block* from the ALARM IN /ALARM OUT terminal block.

Step 2 Unfasten stop screws from the *pluggable block*, insert signal cables into slots and fasten stop screws. Ensure signal cables are tight.

Step 3 Connect *pluggable block* back into terminal block.

2.3.4 Controller Connection

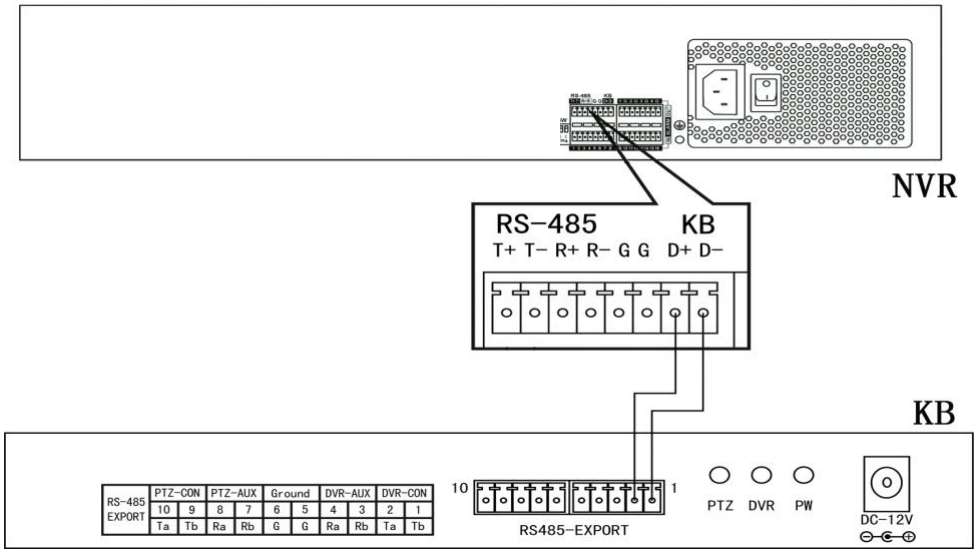

Figure 2-15 Controller Connection

To connect a controller to the NVR:

Step 1 Disconnect pluggable block from the KB terminal block.

Step 2 Unfasten stop screws from the KB D+, D- *pluggable block*, insert signal cables into slots and fasten stop screws. Ensure signal cables are tightly connected.

Step 3 Connect Ta on controller to D+ on terminal block and Tb on controller to D- on terminal block. Fasten stop screws.

Step 4 Connect *pluggable block* back into terminal block.

NOTE

Make sure both the controller and NVR are grounded.

2.4 HDD Storage Calculation Chart

The following chart shows an estimation of storage space used based on recording at one channel for an hour at a fixed bit rate.

Bit Rate	Storage Used
96K	42M
128K	56M
160K	70M
192K	84M
224K	98M
256K	112M
320K	140M
384K	168M
448K	196M
512K	225M
640K	281M
768K	337M
896K	393M
1024K	450M
1280K	562M
1536K	675M
1792K	787M
2048K	900M
4096K	1.8G
8192K	3.6G
16384K	7.2G

NOTE

Please note that supplied values for storage space used is just for reference. The storage values in the chart are estimated by formulas and may have some deviation from actual value.

Chapter 3 Menu Operation

3.1 Start up Your Device

Proper startup and shutdown procedures are crucial to expanding the life of the NVR.

To start your device:

Step 1 Check the power supply is plugged into an electrical outlet. It is HIGHLY recommended that an Uninterruptible Power Supply (UPS) be used in conjunction with the device. The Power button on the front panel should be red, indicating the device is receiving the power.

Step 2 Press the POWER button on the front panel. The Power LED should turn blue. The unit will begin to start.

After the device starts up, the wizard will guide you through the initial settings, including modifying password, date and time settings, network settings, HDD initializing, and recording.

3.2 Activate Your Device

Purpose:

For the first-time access, you need to activate the device by setting an admin password. No operation is allowed before activation. You can also activate the device via Web Browser, SADP or Client Software.

Step 1 Enter the admin password twice.

NOTE

You can click to show the characters.

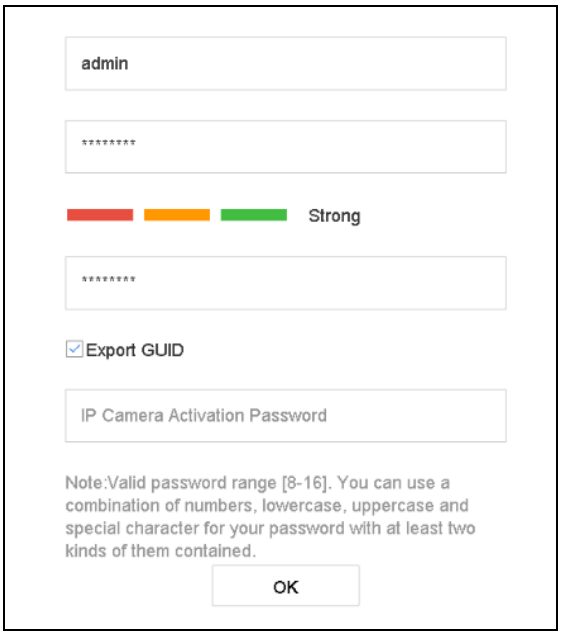

Figure 3-1 Setting Admin Password

WARNING

We highly recommend you create a strong password of your own choosing (Using a minimum of 8 characters, including at least three of the following categories: upper case letters, lower case letters, numbers, and special characters.) in order to increase the security of your product. And we recommend you reset your password regularly, especially in the high security system, resetting the password monthly or weekly can better protect your product.

Step 2 Enter the password to activate the IP camera (s) connected to the device.

Step 3 Optionally, check **Export GUID** to export the GUID for future password resetting.

Step 4 Click **OK** to save the password and activate the device.

NOTE

- After the device is activated, you should properly keep the password.
- When you have enabled **Export GUID**, continue to export the GUID file to the USB flash drive for the future password resetting.
- You can duplicate the password to the IP cameras that are connected with default protocol.

3.3 Configure Unlock Pattern for Login

For the admin user, you can configure the unlock pattern for device login.

Step 1 After the device is activated, you can enter the following interface to configure the device unlock pattern.

Step 2 Use the mouse to draw a pattern among the 9 dots on the screen. Release the mouse when the pattern is done.

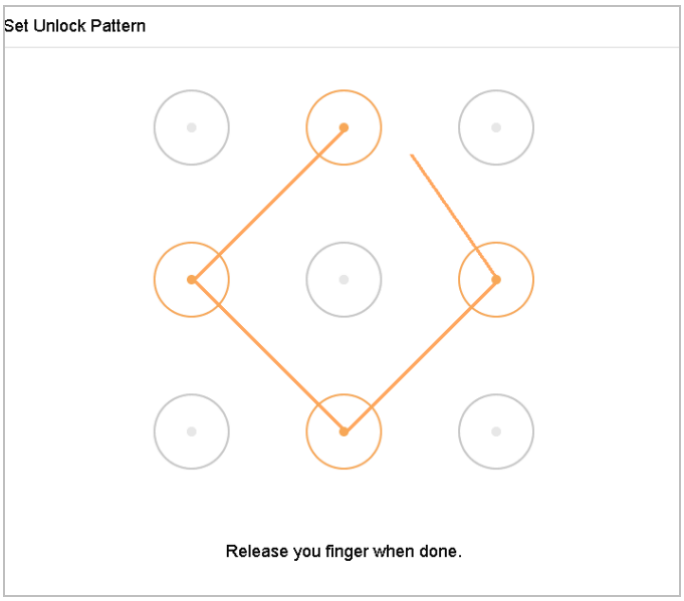

Figure 3-2 Draw the Pattern

NOTE

Connect at least 4 dots to draw the pattern.

Each dot can be connected for once only.

Step 3 Draw the same pattern again to confirm it. When the two patterns match, the pattern is configured successfully.

3.4 Log in to the System

Purpose:

If the device has logged out, you must log in to the device before operating the menu and other functions. You can select to log in by unlock pattern or passwrod.

Step 1 Right click the mouse on the screen and select the menu to enter the interface.

Step 2 Enter **User Name**.

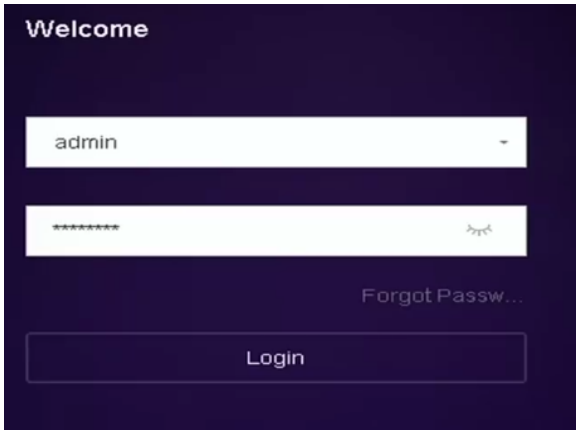

Figure 3-3 Login Interface

Step 3 Enter **Password**.

Step 4 Click **Login**.

NOTE

In the Login dialog box, if you enter the wrong password for 7 times, the current user account will be locked for 60 seconds.

3.5 Enter Wizard to Configure Fast Basic Settings

The Setup Wizard can walk you through some important settings of the device. By default, the Setup Wizard starts once the device has loaded.

Check the checkbox to enable Setup Wizard when device starts. Click **Next** to continue the setup wizard. Follow the guide of the Setup Wizard to configure the system resolution, system date/time, network settings, HDD management, record settings, etc.

Figure 3-4 Wizard

3.6 Network Settings

Purpose:

Network settings must be properly configured before you operate device over network.

Step 1 Go to **System** > **Network** > **TCP/IP**.

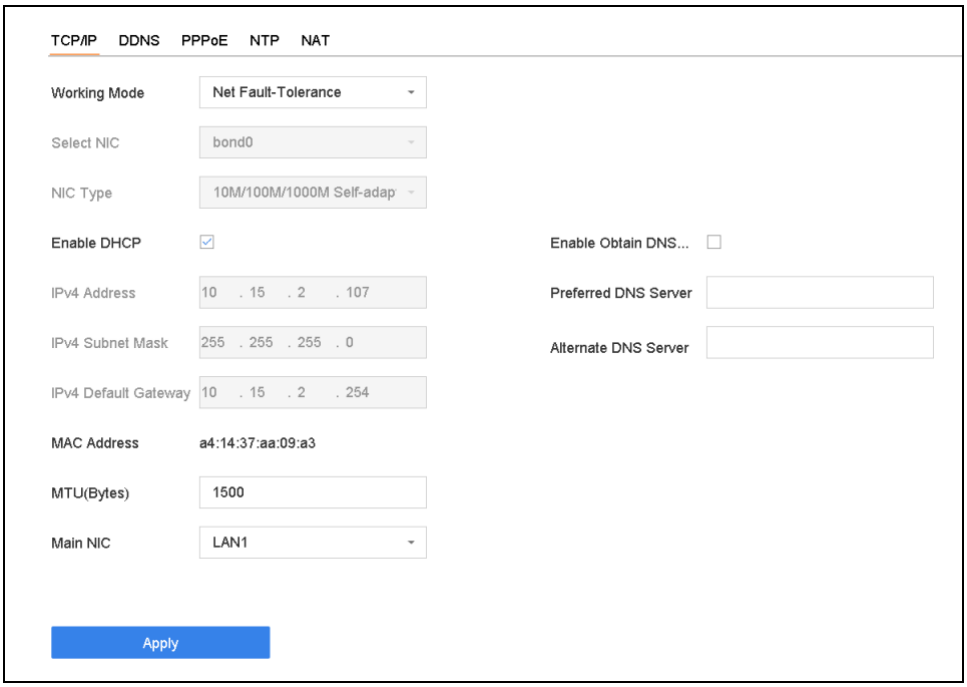

Figure 3-5 Network Settings

Step 2 Configure the parameters of NIC Type, IPv4 Address, IPv4 Gateway, MTU and DNS Server.

Step 3 If the DHCP server is available, you can check **DHCP** to automatically obtain an IP address and other network settings from that server.

Step 4 After having configured the general settings, click **Apply** to save the settings.

3.7 Add IP Cameras

Purpose:

Before you can get live video or record the video files, you should add the network cameras to the connection list of the device.

Before you start:

Ensure the network connection is valid and correct, and the IP camera to add has already been activated.

Step 1 Click on the main menu bar to enter the Camera Management.

Step 2 Click the **Custom Add** tab on the title bar to enter the Add IP Camera interface.

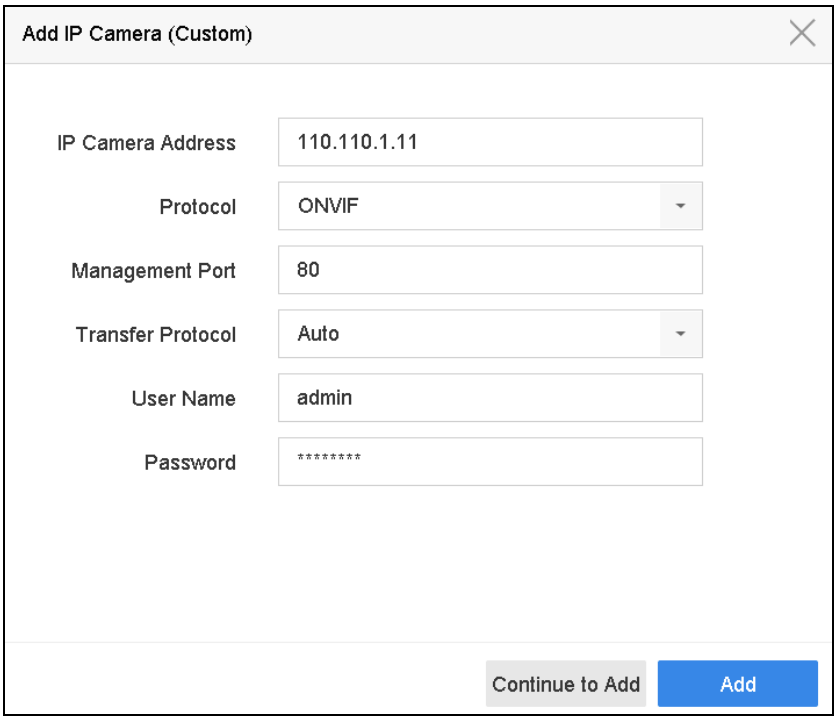

Figure 3-6 Add IP Camera

Step 3 Enter IP address, protocol, management port, and other information of the IP camera to add.

Step 4 Enter the login user name and password of the IP camera.

Step 5 Click **Add** to finish the adding of the IP camera.

Step 6 (Optional) Click **Continue to Add** to continue to add other IP cameras.

3.8 Start Live View

Enter the live view mode ( ).

- You can select a window and double click a camera from the list to play the video from the camera in the selected window.
- Use the toolbar at the playing window bottom to realize the capture, instant playback, audio on/off, digital zoom, live view strategy, show information and start/stop recording.

3.9 One-Touch RAID Configuration

Purpose:

The device supports the RAID storage function. Through one-touch configuration, you can quickly create the disk array. By default, the array type to be created is RAID 5.

Before you start:

- Enable RAID function.
- Install at least 3 HDDs. If more than 10 HDDs are installed, 2 arrays will be created. To maintain reliable and stable running of the HDDs, it is recommended to use enterprise-level HDDs with the same model and capacity.

Step 1 Go to **Storage > RAID Setup > Physical Disk**.

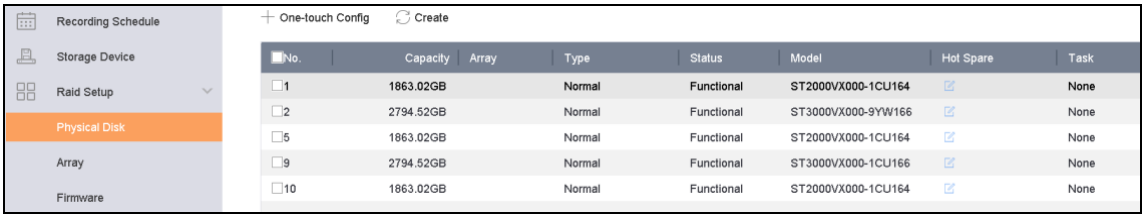

Figure 3-7 Physical Disk

Step 2 Click **One-touch Config**.

Step 3 Edit the array name in **Array Name** text filed and click **OK** to start configuring.

NOTE

If you install 4 or more HDDs, a hot spare disk for array rebuilding will be created.

Step 4 A message box will pop up when the array creation is completed, click **OK** on it.

Step 5 Optionally, the device will automatically initialize the created array. Go to **Storage > RAID Setup > Array** view the information of created arrray.

3.10 Recording Settings

Before you start:

Make sure that the disk has already been installed or added. If not, please install or add a disk and initialize it. You may refer to the user manual for detailed information.

Option 1:

In the live view mode, select a connected camera window and click at the toolbar to start recording.

Option 2:

Step 1 Go to **Storage** > **Recording Schedule**.

Step 2 Select a camera.

Step 3 Check the **Enable Schedule**.

Step 4 Select a **Record Type**. The record type can be Continuous, Motion Detection, Alarm, Motion | Alarm, Motion & Alarm, Event, etc.

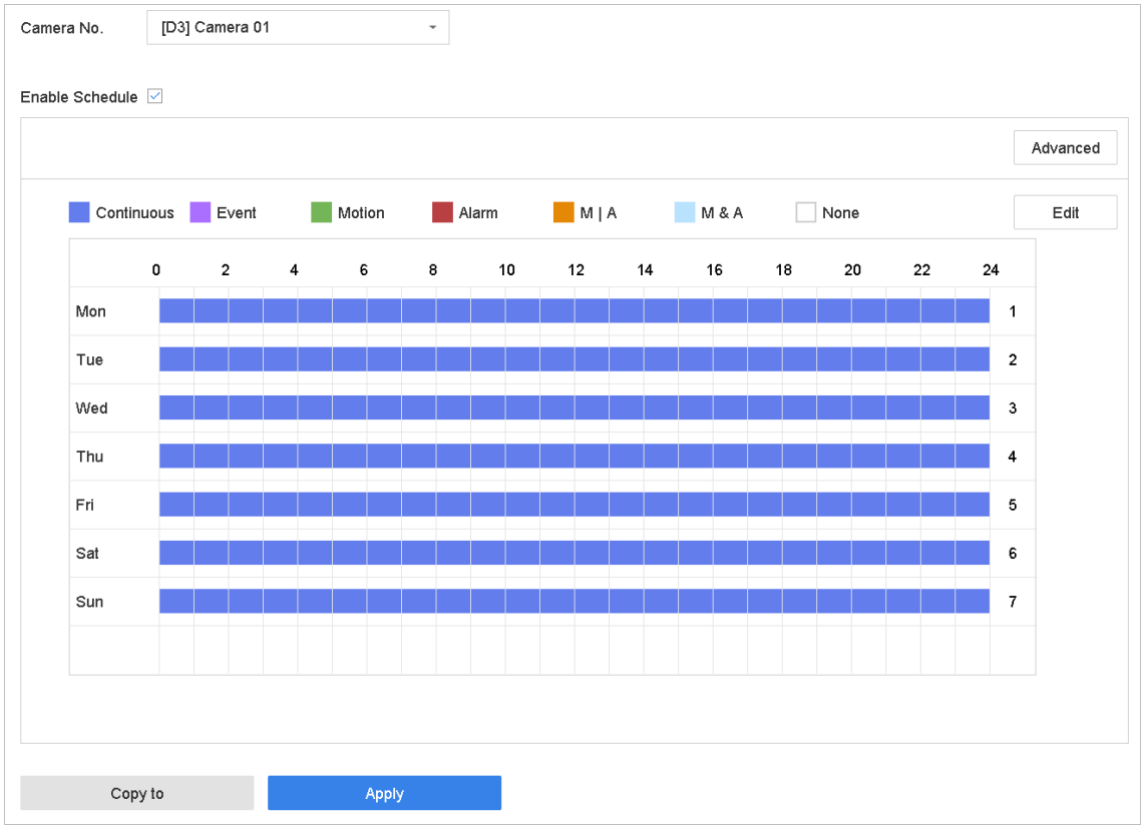

Figure 3-8 Record Schedule

Step 5 Select a day and click-and-drag the mouse on the time bar to set the record schedule.

Step 6 Click **Apply** to save the settings.

3.11 Playback

The recorded video files on the hard disk can be played back in the following modes: instant playback, all-day playback for the specified channel, and playback by normal/smart/custom /sub-periods/external file. Refer to the *User Manual* for detailed information.

Step 1 Enter the playback mode ( ).

Step 2 Check the channel(s) in the list and then double-click to select a date on the calendar.

Step 3 You can use the toolbar in the bottom part of Playback interface to control playing progress.

Figure 3-9 Playback Interface

Chapter 4 Access by Web Browser

NOTE

You shall acknowledge that the use of the product with Internet access might be under network security risks. For avoidance of any network attacks and information leakage, please strengthen your own protection. If the product does not work properly, please contact with your dealer or the nearest service center.

Purpose:

You can get access to the device via web browser. You may use one of the following listed web browsers: Internet Explorer 6.0, Internet Explorer 7.0, Internet Explorer 8.0, Internet Explorer 9.0, Internet Explorer 10.0, Apple Safari, Mozilla Firefox, and Google Chrome. The supported resolutions include 1024*768 and above.

Step 1 Open web browser, enter the IP address of the device and then press Enter.

Step 2 Login to the device.

- If the device has not been activated, you need to activate the device first before login.

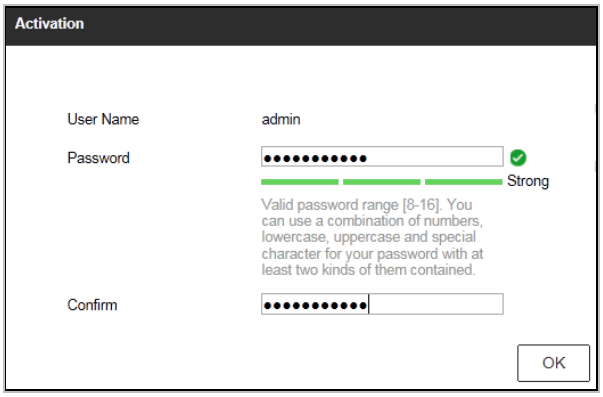

Figure 4-1 Set Admin Password

1) Set the password for the admin user account.
2) Click **OK** to login to the device.

WARNING

STRONG PASSWORD RECOMMENDED– We highly recommend you create a strong password of your own choosing (using a minimum of 8 characters, including upper case letters, lower case letters, numbers, and special characters) in order to increase the security of your product. And we recommend you reset your password regularly, especially in the high security system, resetting the password monthly or weekly can better protect your product.

- If the device is already activated, enter the user name and password in the login interface, and click **Login**.

Figure 4-2 Login

Step 3 Install the plug-in before viewing the live video and managing the camera. Please follow the installation prompts to install the plug-in.

NOTE

You may have to close the web browser to finish the installation of the plug-in.

After login, you can perform the operation and configuration of the device, including the live view, playback, log search, configuration, etc.

0401601080723

UD11108N